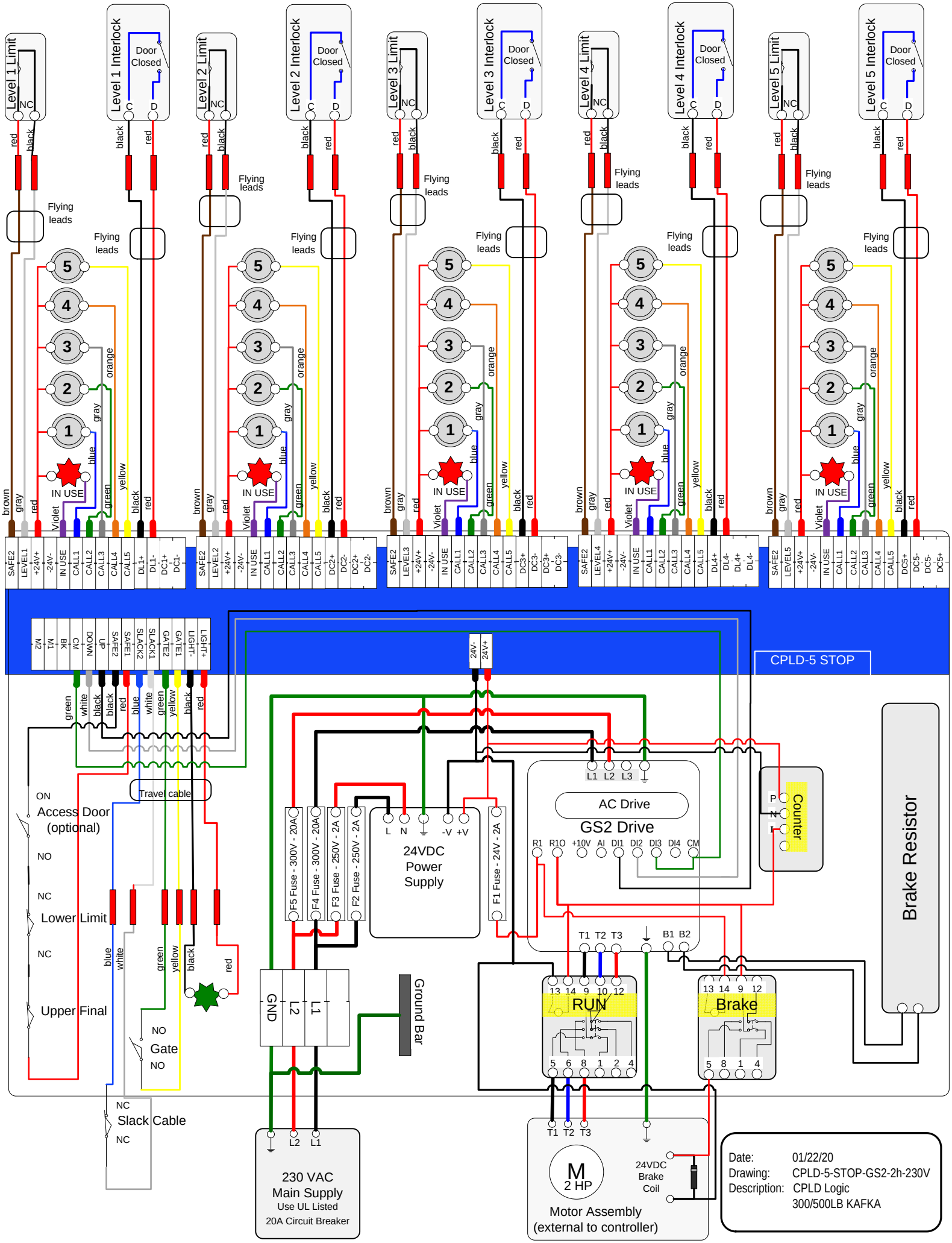
Level 1 Limit
Level 1 Interlock
Door Closed
Level 2 Limit
Level 2 Interlock
Level 3 Limit
Level 3 Interlock
Level 4 Limit
Level 4 Interlock
Level 5 Limit
Level 5 Interlock
Flying leads
IN USE
CPLD-5 STOP
Travel cable
Access Door (optional)
Lower Limit
Upper Final
Gate
Slack Cable
F5 Fuse - 300V - 20A
F4 Fuse - 300V - 20A
F3 Fuse - 250V - 2A
F2 Fuse - 250V - 2A
F1 Fuse - 24V - 2A
24VDC Power Supply
AC Drive
GS2 Drive
Counter
Brake Resistor
RUN
Brake
Ground Bar
230 VAC Main Supply
Use UL Listed
20A Circuit Breaker
Motor Assembly (external to controller)
2 HP
24VDC Brake Coil
Date: 01/22/20
Drawing: CPLD-5-STOP-GS2-2h-230V
Description: CPLD Logic 300/500LB KAFKA