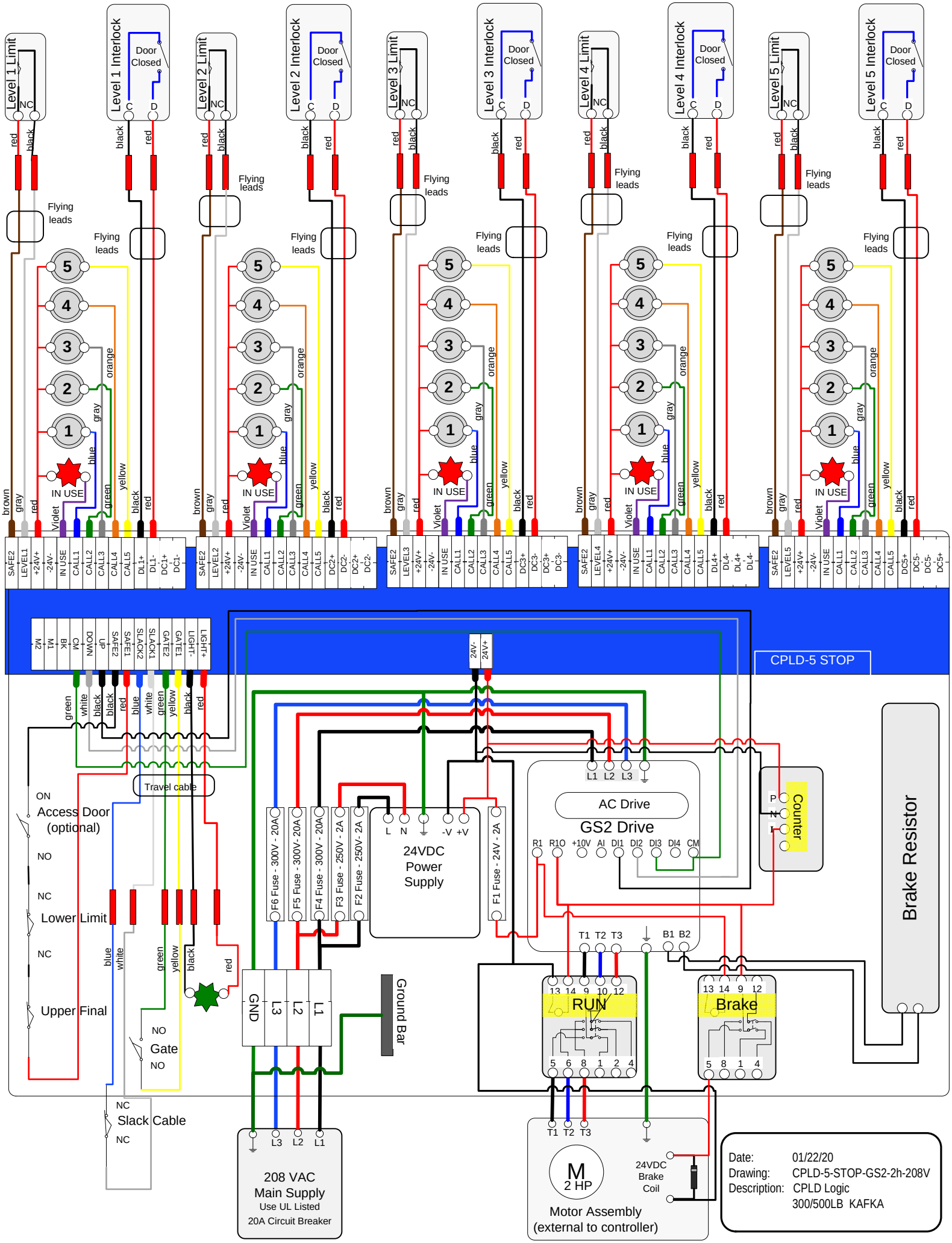
Level 1 Limit
Level 1 Interlock
Door Closed
Level 2 Limit
Level 2 Interlock
Level 3 Limit
Level 3 Interlock
Level 4 Limit
Level 4 Interlock
Level 5 Limit
Level 5 Interlock
Flying leads
IN USE
CPLD-5 STOP
Travel cable
Access Door (optional)
Lower Limit
Upper Final
Gate
Slack Cable
24VDC Power Supply
AC Drive
GS2 Drive
Counter
Brake Resistor
RUN
Brake
Ground Bar
208 VAC Main Supply
Use UL Listed
20A Circuit Breaker
Motor Assembly (external to controller)
24VDC Brake Coil
Date: 01/22/20
Drawing: CPLD-5-STOP-GS2-2h-208V
Description: CPLD Logic
300/500LB KAFKA